Seminar Nasional Aplikasi Teknologi Informasi 2008 (SNATI 2008)
Yogyakarta, 21 Juni 2008

ISSN: 1907-5022

COUPLING OF GEOGRAPHIC INFORMATION SYSTEM AND OPTIMIZATION METHOD WITH CONGESTION CONSIDERATION TO SUPPORT URBAN FREIGHT TRANSPORT

Yudha Prambudia
Widyatama University
Faculty of Engineering - Industrial Engineering Department
Cikutra #204 Bandung 40125
Email: yudhap@widyatama.ac.id

Abstract
The study aimed to evaluate focus and quality of Indonesian e-government website. All 456 websites of districts/cities throughout the country are taken into account. The study revealed that 66.9% of districts/cities had their own website and were in operations, while other were either still embedded into website of province, not found, or inaccessible. In general, the websites focused on promoting linkage between government and business, while efficiency and effectiveness in the delivery of frontline services were less prioritized. The quality of the website in general was in medium level, both in terms of the quality of content and the level of ease-of-use.

Keywords: *e-government website, website focus, website quality, Indonesia.*

INTRODUCTION

1.1 Role of Congestion in Urban Freight Transport

Demand for access and mobility for both passenger and goods within a city are arising parallel to population growth. In addition, each year the number of vehicles running on city streets is increasing. This situation raises consequences on traffic, thus, congestion becomes a common or even an inevitable issue for many cities. On the other hand, the population growth had foster businesses to enlarge, which also pushed logistics businesses, in particular, the urban freight businesses to thrive.

The situation above creates a dilemma for the urban freight businesses. They are required to provide a better level of service to customers, but at the same time, they also have to keep their costs as low as possible, because competition is fierce. In order to survive the competition, efficiency is a very important issue. Congestion is one contributing factor to this dilemma [10]. It discourages efficiency by delaying deliveries and prolonged travel time.

Looking at the situation above, therefore, urban freight transporters need to consider congestion in their operational planning to make sure that congestion interference is minimal.

1.2 Use of GIS in Urban Freight Transport

It is logically viable to use GIS in this context as the urban freight operation is part of logistics system which is very much spatial in nature (e.g, pick-up and delivery points, movements of vehicle) Therefore, visual modelling of congestion in GIS will greatly enhance the swiftness of understanding the road network situation, thus helping the urban freight planner to deal with congestion.

1.3 Coupling of GIS and Optimization Method in Urban Freight Context.

There are already various efforts related to urban freight transport with routes optimization which is combined with GIS (e.g. [4] and [5]). However, difficulties in coupling GIS and optimization method in this context are still factual as indicated in [7], as follow; firstly, the GIS viewpoint of logistics is usually simplified, while logistics is actually quite complex. Secondly, in order to handle the complexity of logistics activities (e.g. urban freight operations) in GIS, a huge effort of low level programming is needed. Thirdly, although GIS is very powerful in dealing with physical artefacts model, it lacks power in representing many logical decision of logistics problem. These are difficulties in which logistics manager or planner avoids. Therefore, from practical point of view, it is still favourable to have a loose coupling between the two.

2. GIS APPROACH TO CONGESTION

2.2 Congestion Representation within GIS

There are various works related to congestion representation within GIS, for example; [12], relate congestion to delay time. While, [8] used links-speed with dynamic segmentation in their congestion studies. Both are using colour coded lines to visualize congestion.
Congestion in this paper is represented in GIS as follow; a road network layer is consisted of road

ISSN: 1907-5022

segments links, each segment has certain congestion situation which is represented by an index. An index is a value which shows the percentage of speed reduced if a vehicle travels on a certain road segment. Congestion situation in a day is divided into two timeframes of AM (morning) and PM (afternoon). A multi-layered approach [3] is adapted to represent the timeframes in GIS. Therefore, there are fourteen layers of road network that represent congestion situation in a week. Colour coded lines is used to represent the congestion index value.

An example of congestion index data of a road segment for each timeframes is presented in Table 1. In Monday, for example, Jalan Pasirkaliki has congestion index of 0% in the AM peak hours and 83% in the PM peak hours. Figure 2, shows the visualization of the congestions index in each timeframe as layers in GIS.

PasirKaliki		Congestion Index
Monday	Session 1	0%
	Session 2	83%
Tuesday	Session 1	25%
	Session 2	58%
Wednesday	Session 1	58%
	Session 2	92%
Thursday	Session 1	25%
	Session 2	42%
Friday	Session 1	42%
	Session 2	33%
Saturday	Session 1	0%
	Session 2	0%
Sunday	Session 1	0%
	Session 2	0%

Table 1 **Summary of Congestion Index of Jalan Pasirkaliki**

The congestion index is changing over time, depending on the pace of data updating. The best data updating would come from a real-time data provider such as Intelligent Transportation System or ITS sensors [7] [10]. The faster the data updating process, the faster the index will change, thus, the better the planning will be. However, due to lack of resources, it is not possible for this paper to update the data in real-time. The data provided for this paper is a survey data, therefore congestion index updating is very limited.

3. URBAN FREIGHT OPTIMIZATION

3.1 Optimization Methods

In this paper the optimization is conducted in two steps. The first step is the preparation step, which is to find initial shortest paths between a pair of point of origin and destination. This is done by using the Dijkstra's shortest path algorithm [9]. The output from this step then refined in the optimization step. Optimization of freight transport within urban setting can be approached from Vehicle Routing Problem (VRP) standpoint [10]. There are mainly three types of VRP approach to routing optimization, namely; Exact approach, Meta-Heuristics, and Heuristics [6]. The approached used in the optimization step is from the latter type, namely the Clarke-Wright Saving heuristic. This heuristic emphasized on the saving of costs that can be achieved by modifying sequences of routes [1], thus the optimal condition would be the best or highest saving route. An implementation of Clarke-Wright Saving heuristic called Logware: Router [2] is used for this paper.

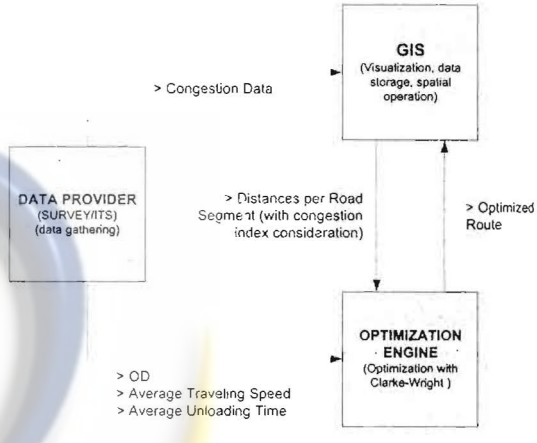

Figure 1 **Relation between Data Provider, GIS and Optimization Engine.**

3.2. Data, GIS and Optimization Engine

The relations between data provider, GIS and optimization engine are depicted in Figure 1. Data provider such as; ITS, survey or any other data gathering activities supply the congestion-data per timeframe to GIS layers, which are recorded in a road segment database. Thus, it will eventually construct layers which hold road network congestion indexes.

Identified origins-destinations (OD) are supplied to the optimization engine. Along with it, are the road network average travelling-speed and average loading-unloading time. The OD than settled in a table of OD pairs. In order to run the Clarke-Wright Saving heuristics algorithm, the OD pairs need to have impedance; in this case, distance is the default impedance of the optimization engine.

Distances for the OD pairs are provided from GIS, by calculating distances of road segments between OD pairs, with an assumption that the road segments are all two ways and driver can only make turn on intersections, turns or stops, which are modelled as nodes. Thus, the assumption implied that each origin and destination should be

ISSN: 1907-5022

modelled as a node as well. An elaboration of distances calculation is provided in section 3.3.

Road segments relations with OD from the database standpoint are described as follow; an OD pair must have one or many road segments and a road segment belong to none OD pair or many OD pairs. An intermediary table is provided for the registration of OD pair with road segment.

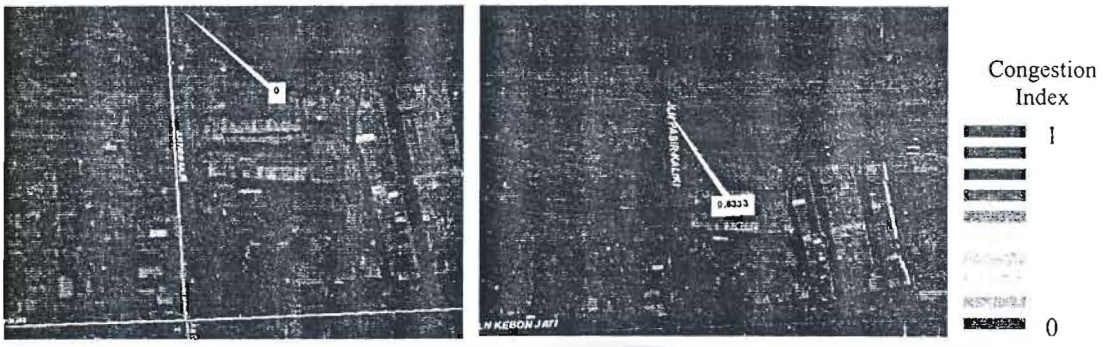

Figure 2 **Colour coded congestion status of Pasirkaliki as visualized in GIS**

(Left: Monday 08.30–10.30 congestion index=0;
Right: Monday 16.00-18.00 congestion index=0.8333)

A database query is conducted to procure OD pair's distances from the intermediary table. The OD pair's distances is the required information for optimization engine to run; therefore it is then exported to the optimization engine (e.g. as .csv or .xls file).

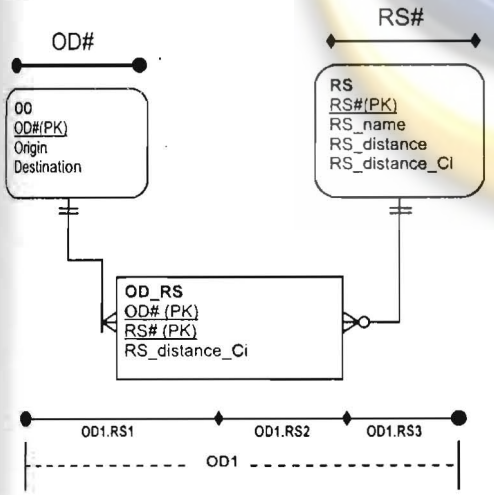

Figure 1 **Entity Relationship between OD and Road Segment within GIS and its topological model.**

3.3. Influence of Congestion to Distance

The distances in the road segment table are originally obtained from the topology measure of each road segment within GIS. However, at the moment, the optimization engine does not consider congestion and it assume that travel speed is constant, thus it is not able to handle dynamic travel speed. Therefore, in order to give way to incorporate congestion influence in the optimization, the road segment distances need to be adjusted. Moreover, the data collection method assumes that congestion is an obstacle to travel speed while the impedance viable for the OD pair in the optimization engine is distance; therefore, the distance need to be adjusted according to congestion index. The adjustment is done within the GIS, using some database query and operations.

The congestion incorporation to the optimization is explained as follow; if a road segment congestion index is 100% this is classified as a non-operational road segment, this means that the travelling speed on this road would be reduced down to 0 Km/h [11] from the average travelling speed obtained, which is 40 km/h.

The decrease of speed gives the impression that the distance travelled is longer than it actually is, because the travelling time would increase as well. In the following, the adjustment of distance is elaborated in a mathematical modelling.

The relationship between an adjusted travelling speed, travelling speed average and congestion index is formulated as follow; (an example of Jalan Pasirkaliki on Monday (Ci=83) afternoon is provided for clearer understanding).

ISSN: 1907-5022

$V_Ci = Vo - 0.4Ci$ in example;

$V_Ci = 40 - 0,4 \,.\, (0,83)$
$= 6,8$

Vo = Average Travelling Speed (Km/h)
V_Ci = Travelling Speed Influenced by Congestion

After the adjusted traveling speed is obtained, 6,8 Km/H, then, to obtain the travel time, the measured distance of the road segment (Jalan Pasirkaliki) of 2,56 Km, is incorporated in a formula as follow;

$To = RSo / Vo$
$= 2,56 / 40 = 0,064$

and,

$T_Ci = RSo / V_Ci$
$= 2,56 / 6,8 = 0,376$

To = Travelling Time in Normal Condition (Hours)
T_Ci = Travelling Time influenced by Congestion (Hours)
RSo = Road Segment Distance in Normal Condition (Km)

therefore, to find the value for the impression of lengthen distance, a direct comparison of traveling time is conducted;

$To / T_Ci = RSo / RS_Ci$

Thus,

$RS_Ci = RSo \,.\, T_Ci / To$
$= 2,56 \,.\, 0.376 / 0,064$
$= 15, 04$

RS_Ci = Road Segment Distance Influenced by Congestion (Km)

The calculation shows that the congestion index of 83% on Jalan Pasirkaliki alter the travel time from 0,064 hours to 0,376 hours. This gives the impression that the traveling distance is 15,04 Km instead of 2,56 Km of the actual distance. However, if the congestion index is 100% it will produce a zero travelling speed, thus travel time will become infinite, thus an infinitive distance will also be produced. This is not feasible for the optimization process, therefore if Ci = 100%, then distance is predetermined to 999 Km. This is to make sure that in the optimization process, the road segment will be considered at the last.

3.4. Visualization of Optimized Routes

The optimization engine produces a list of optimized OD pairs as a route. In order to visualize the route in GIS, the result is queried using the OD# of optimized routes from OD#.RS# primary key in the OD_RS table.

The query will produce a set of OD#.RS# which is visualized immediately as selected topologies of nodes and links.

4. CONCLUSION

A coupling of GIS and an optimization engine within the context of urban freight transport is presented. Due to intense requirements to integrate optimization methods within GIS, the loose coupling method is still favourable. However, the combining of two different tools with different standpoint is not without challenges. It was revealed that the value and format of data need to be adjusted.

GIS role in this paper can be summarized as a distance-data provider and visualization tool, while the optimization engine role is to calculate optimized routes.

It is very plausible to lessen the dilemma of urban freight transporters by incorporating congestion in their planning and with the support from a combination of GIS and optimization engine.

5. FURTHER RESEARCH

This paper is created out of an ongoing research; therefore further development may be conducted as follow; an interface or middleware may be built between GIS and optimization engine to make the operation easier. The interface should be able to make the optimization engine automatically read the adjusted distances produces by GIS and it also should be able to automatically query the road segments which are selected as part of the optimized route.

REFERENCES

[1]. Ballou, R. H. *Business Logistics/Supply Chain Management,* Pearson-Prentice Hall, 2004

[2]. Ballou, R. H., *LOGWARE: Selected Computer Programs for Logistics/Supply Chain Planning.* Weatherhead School of Management, Case Western Reserve University, 2004

[3]. Claramunt C., Jiang B., Bargiela A., . *A New Framework for the Integration, Analysis and Visualization of Urban Traffic Data within Geographic Information System.* Transportation Research Part C, 2000.

[4]. Church R. L Cova T.J., *Mapping Evacuation Risk on Transportation Networks Using a Spatial Optimization Model,* Transportation Research Part C, 2000

[5]. Frank W. C., Thill J.C., Batta R., *Spatial Decision Support System for Hazardous Material Truck Routing.* Transportation Research Part C, 2000.

ISSN: 1907-5022

[6]. Gambardella, L.M, *Vehicle Routing Problems (VRPs),* Lecture Notes, Technische Universiteit Eindhoven, 2000.

[7]. Miller H. J., Shaw S. L., *Geographic Information System for Transportation: Principles and Applications.* New York. Oxford University Press 2001.

[8]. Quiroga C. A., *Performance Measure and Data Requirements for Congestion Management Systems.* Transportation Research Part C, 2000.

[9]. Schrijver, A., *A Course in Combinatorial Optimization*, University of Amsterdam 2006

[10]. TANIGUCHI E., THOMPSON R. G., YAMADA, T. VAN DUIN R., *CITY LOGISTICS: NETWORK MODELLING AND INTELLIGENT TRANSPORTATION SYSTEM.* OXFORD, ELSEVIER SCIENCE 2001

[11]. TAMIN, O. Z., *INTEGRATED PUBLIC AND ROAD TRANSPORT NETWORK SYSTEM FOR BANDUNG METROPOLITAN AREA (INDONESIA),* PROCEEDINGS OF THE EASTERN ASIA SOCIETY FOR TRANSPORTATION STUDIES, 2005.

[12]. Taylor M. A.P., Wooley J. E., Zito R., *Integration of the Global Positioning System and Geographical Information System for Traffic Congestion Studies.* Transportation Research Part C, 2000